Far-Infrared Spectroscopy of the Troposphere
- FIRST-
Calibration Update and Table Mountain Deployment

Marty Mlynczak, Rich Cageao, Dave Kratz, Dave Johnson, Jeff Mast, *LaRC*

Harri Latvakoski, Kendall Johnson, Mark Esplin, Erik Syrstad, Mike Watson, *SDL*

FIRST Update

- FIRST developed under NASA ESTO IIP Program starting late 2001
- Demonstrated technology to measure far-IR emission (and entire IR spectrum) in high altitude balloon flight 6/2005
- Flew again in 9/2006
- Balloon flight calibration done through ambient blackbody and "space view" with open port
- In 2007 instrument was modified to operate as a ground-based sensor viewing the zenith. A second "warm" blackbody was added
- In late 2009 FIRST participated in the RHUBC-II campaign, viewing atmosphere in the zenith from Cerro Toco, at 17,500 feet in the Atacama desert – analysis still ongoing pending final radiosonde calibrations

- In 2011 opportunity arose to re-calibrate FIRST with NIST traceability via the NIST transfer radiometer and the LWIRCS blackbody
- This was followed by a deployment of FIRST to Table Mountain September – October 2012 for a ground campaign (still underway!)

- This talk reports on the re-calibration and Table Mountain campaign

FIRST Instrument and Housing

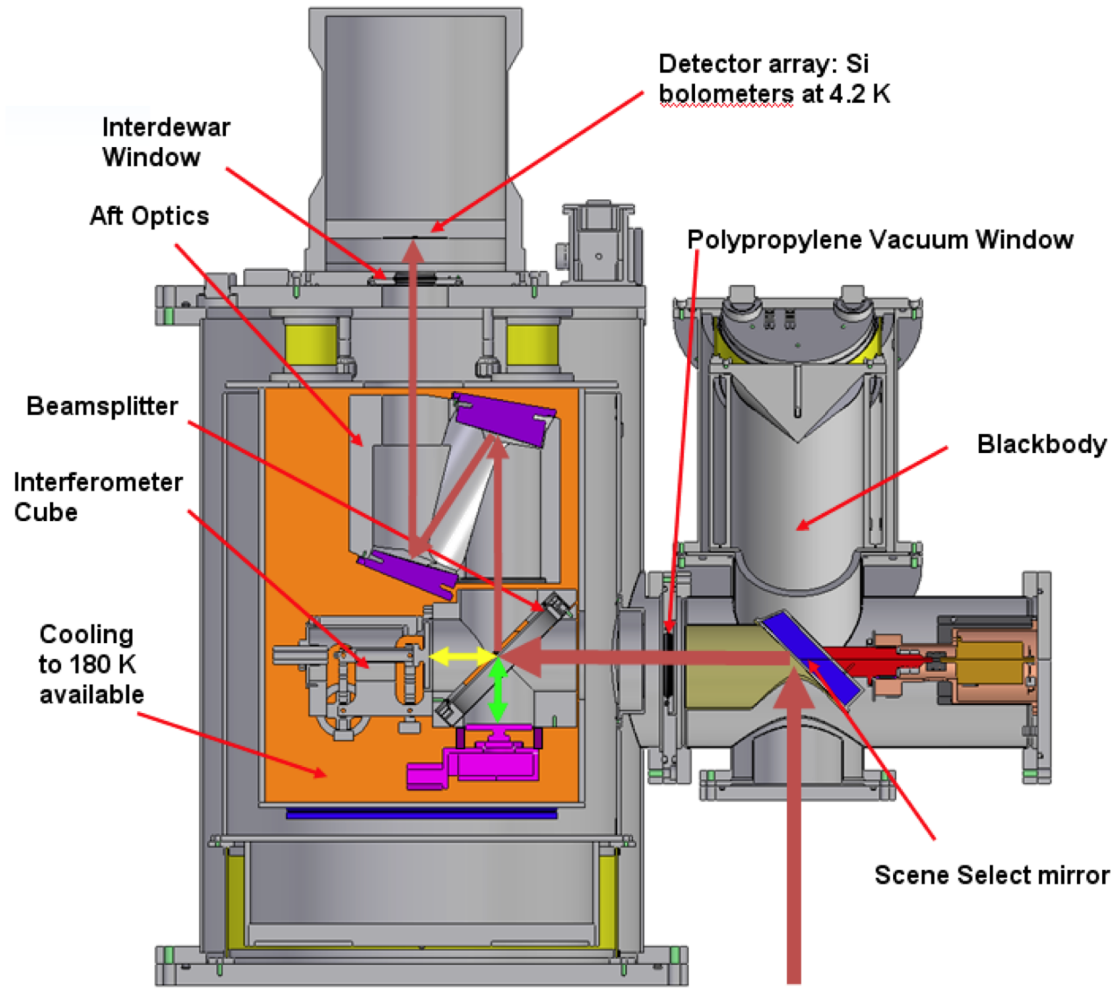

FIRST Balloon Payload System

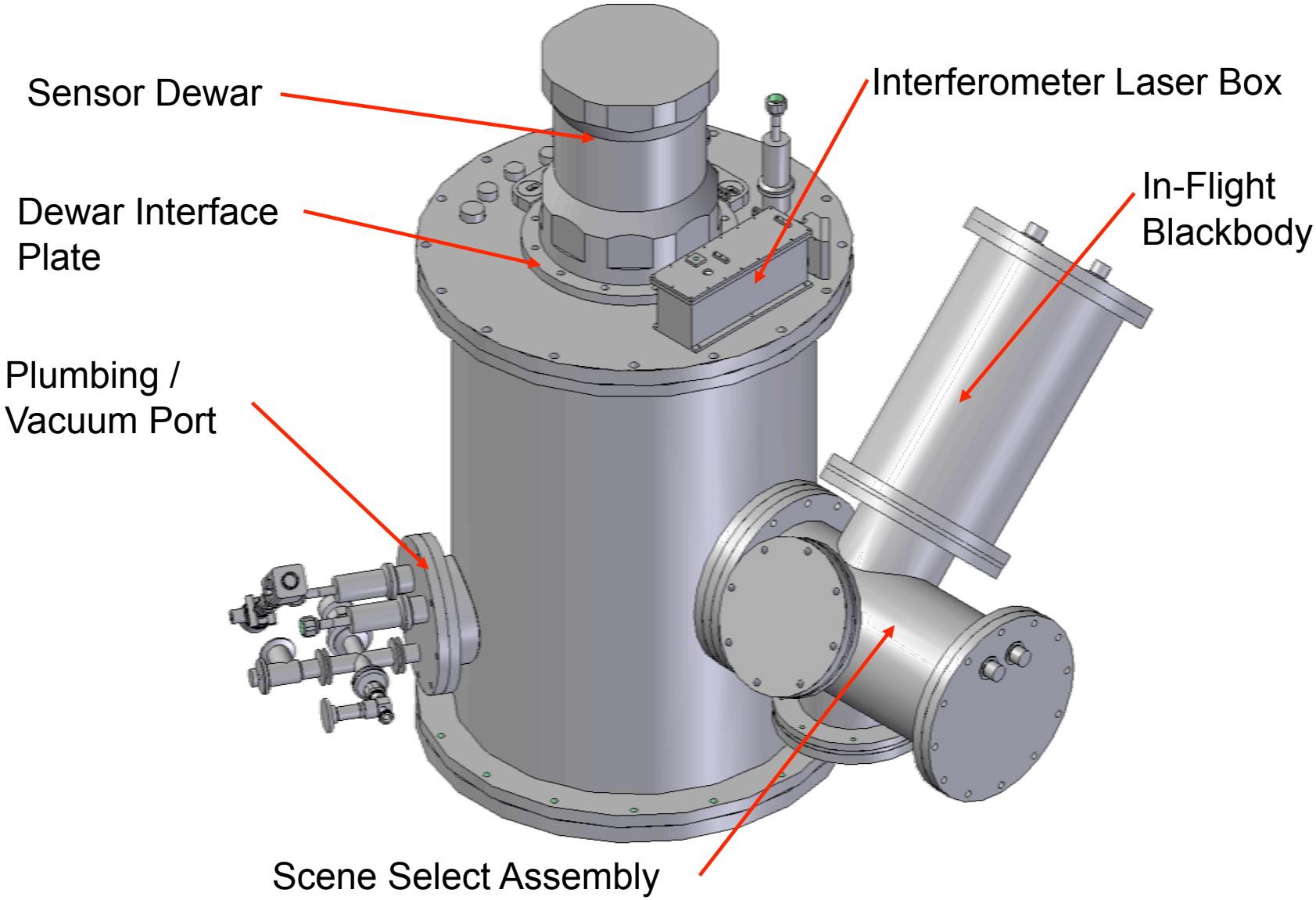

FIRST Spectrum, Center Detector

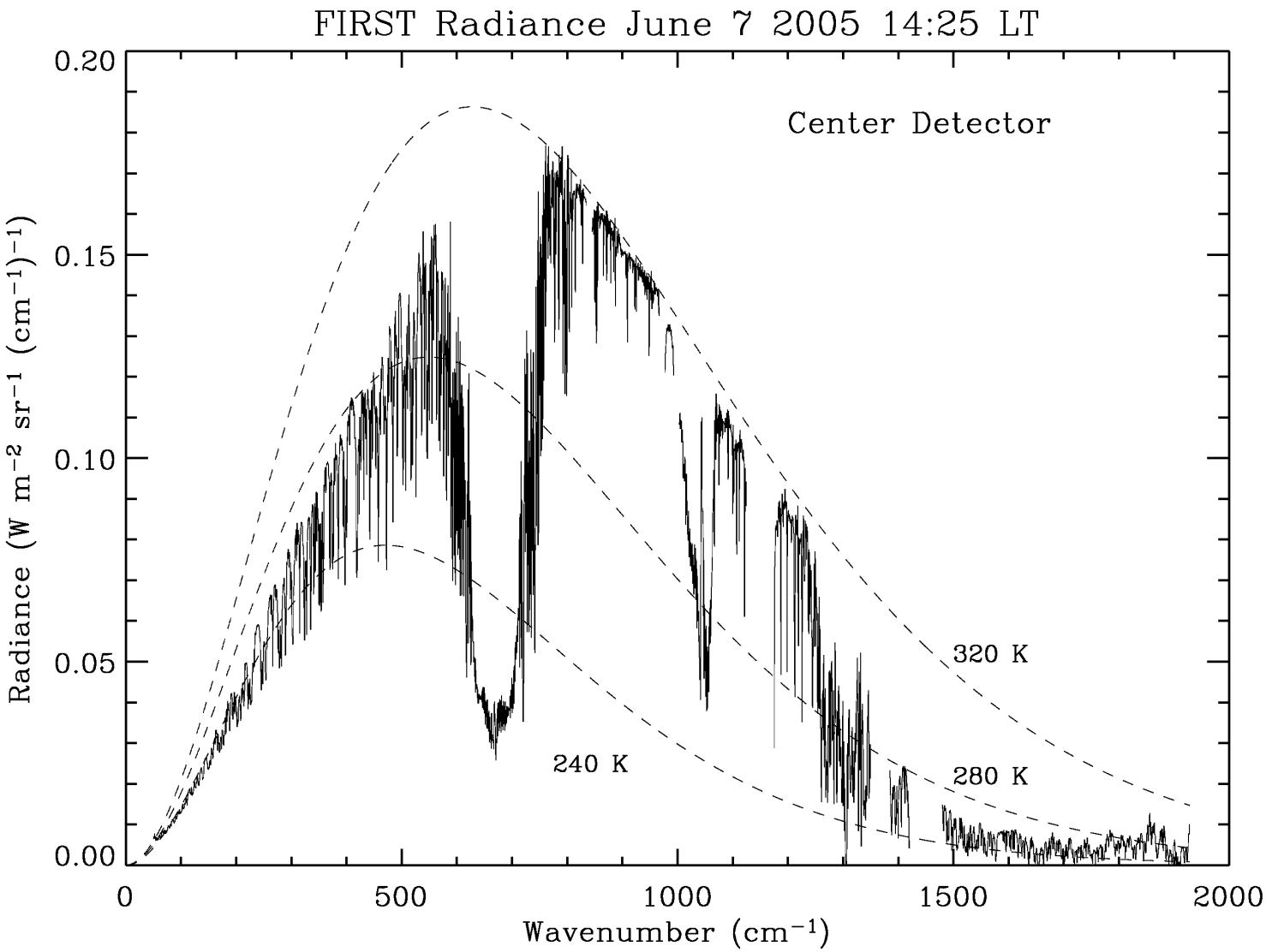

Mlynczak et al., GRL, 2006

LWIRCS Calibration Procedure

- LWIRCS output measured with NIST Transfer Radiometer (TXR)
- TXR has 2 bands, one at 5 um, one at 10 um, each about 1 um wide
- TXR temperature scale based on NIST water bath blackbody
- TXR uncertainty is about 90 mK at 5 um and 150 mK at 10 um
- When observed with TXR, LWIRCS brightness temps at 5 um agree with LWIRCS temperatures to within 95 mK, over 210 to 350 K
- At 10 um, the differences are 185 mK from 180 to 350 K
- LWIRCS emissivity measured to be 0.99969 +/- 0.00003 at 5 um

FIRST Re-Calibration Set Up

- Long-Wave IR Calibration Source (LWIRCS) blackbody attached to FIRST Scene Select assembly
- The 2 FIRST Calibration Blackbodies operated as per ground operation
  - “Ambient” blackbody temperature is 293 K
  - “Warm” blackbody temperature is 324 K
- LWIRCS Temp range over which FIRST tested: 170 K to 330 K
- Both absolute calibration and radiance noise measured as a function of scene temperature

LWIRCS Performance Specifications

Table 2. Performance specifications for the LWIRCS blackbody

Wavelength Range	1 to 100 μm
Temperature Range	90 to 350 K
Aperture	6.1 inches
Beam divergence accepted	6 deg full angle
Emissivity	≥ 0.9998 (1 – 35 μm); ≥ 0.9980 (35 to 100 μm)
Temperature uncertainty	~ 130 mK

FIRST Instrument Performance Goals

Table 1: FIRST instrument parameters and performance goals.

Spectral Range	100 to 1000 cm^{-1} (with some coverage 50 to 2200 cm^{-1})
Resolution	0.643 cm^{-1}
Scan time	11.5 sec
Aperture	7 cm
Focal ratio	f/6.5
Field of view	Ten 0.41°FOV detectors in a sparsely populated 4.4° x 4.4° FOV
NEΔT	0.2 K, 170-1000 cm^{-1}; 0.5 K 100-170 cm^{-1}; @ 230 K (Performance goal)

FIRST Calibration Accuracy
292.7 K Scene Temperature

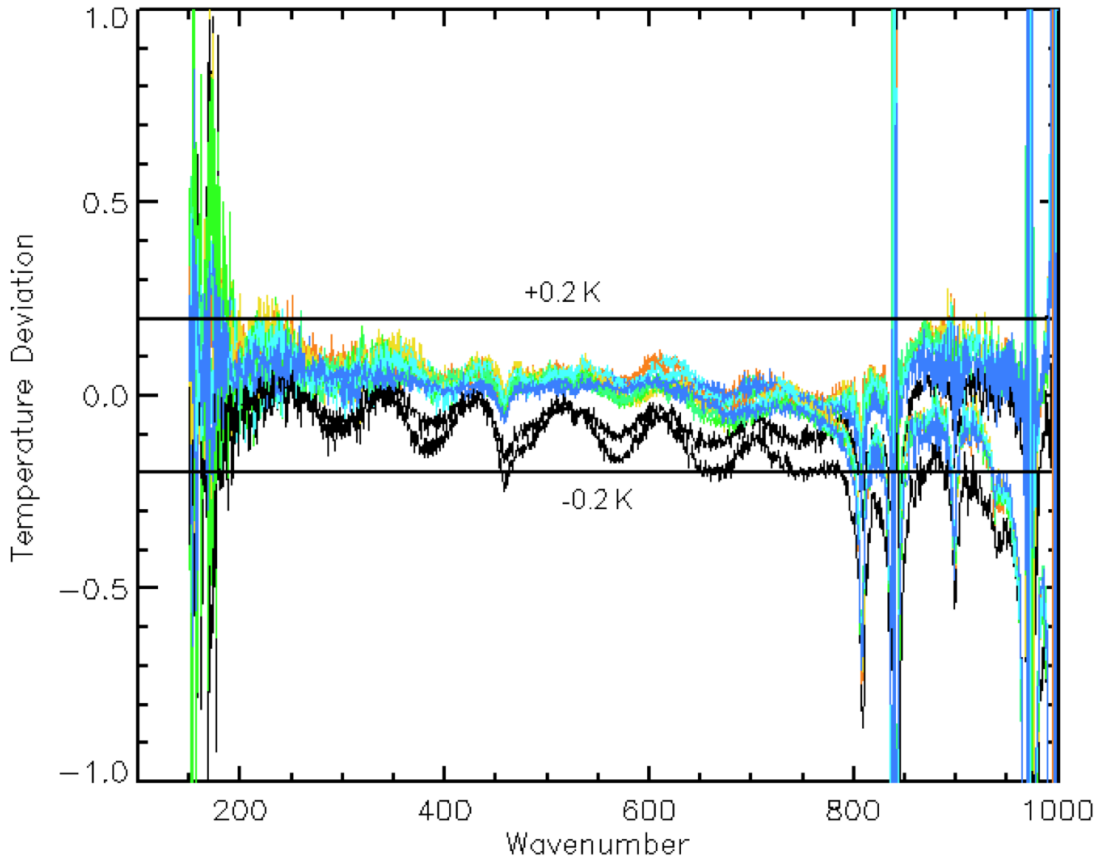

Different colors for each of FIRST's 10 detectors

FIRST Calibration Accuracy
274 K Scene Temperature

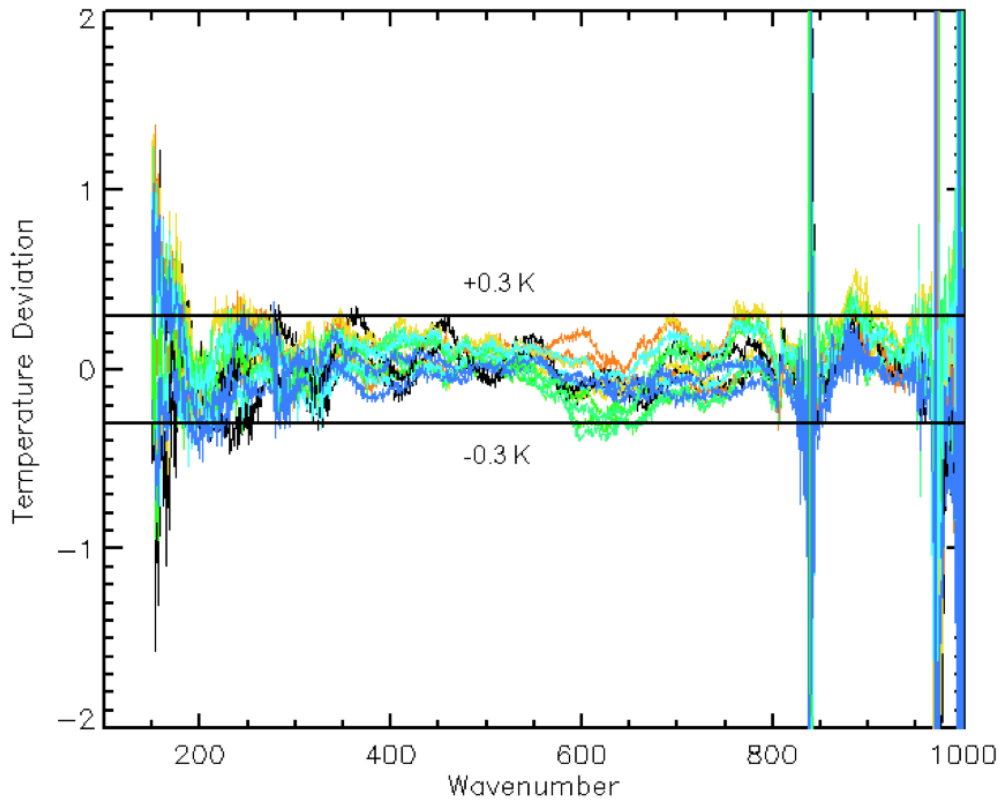

FIRST Calibration Accuracy
247 K Scene Temperature

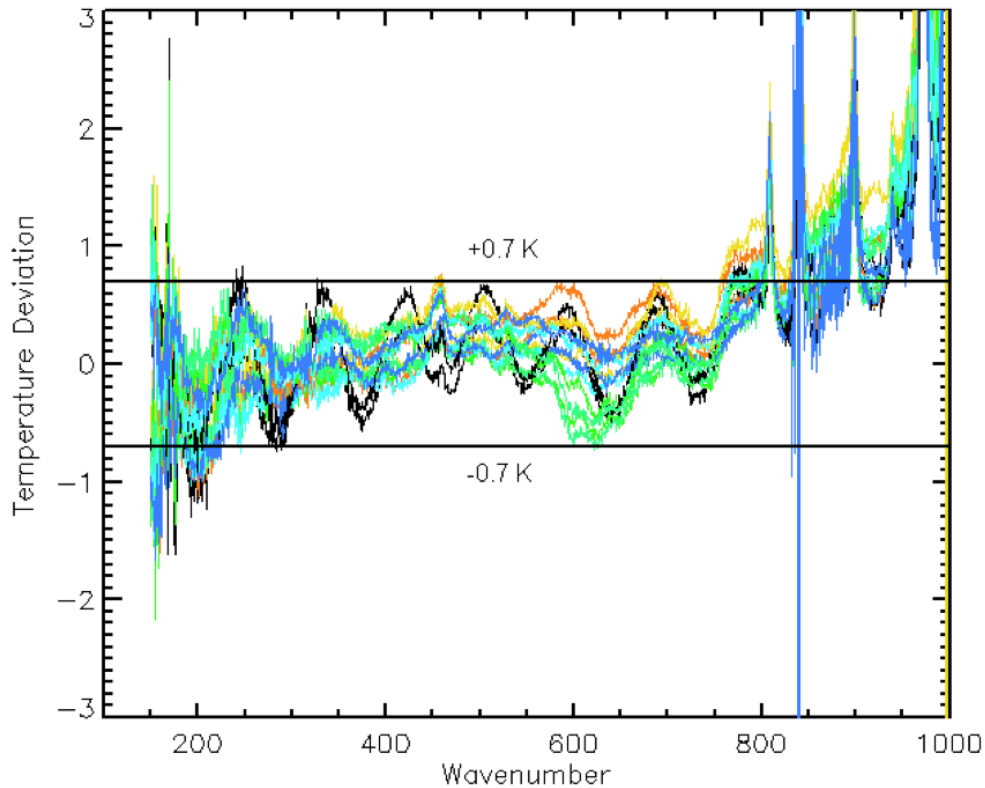

FIRST Calibration Accuracy
225 K Scene Temperature

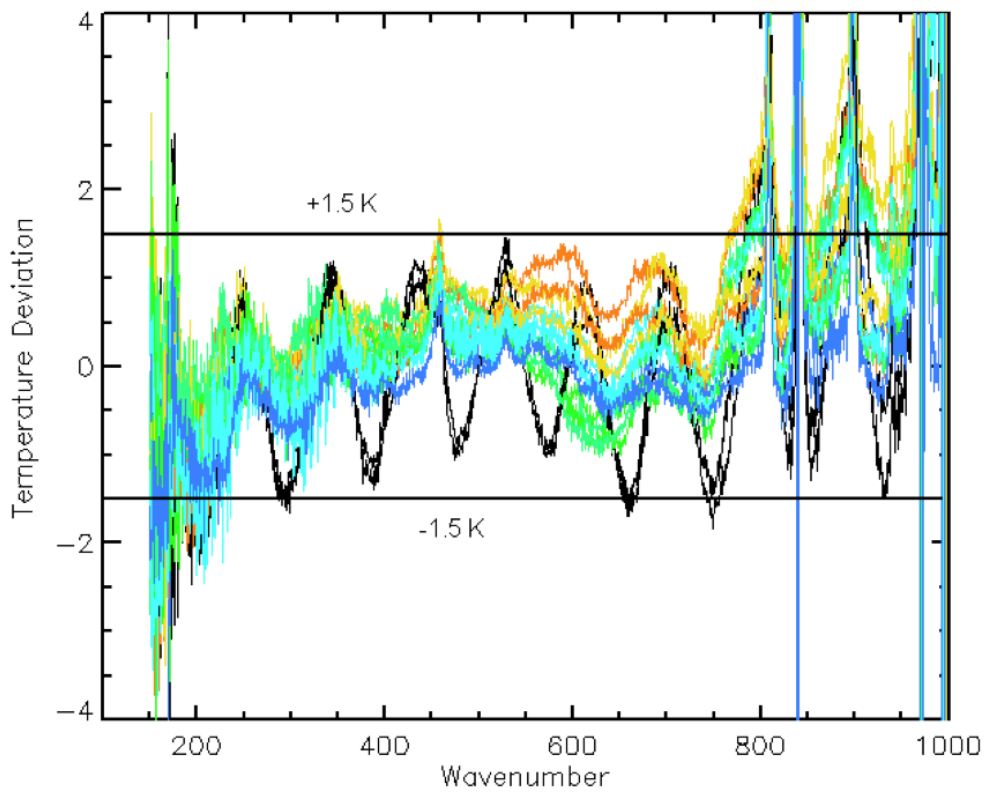

FIRST Re-Calibration - Results

Table 3. FIRST absolute radiometric calibration and noise performance from 200 to 800 cm^{-1}

LWIRCS T(K)	FIRST T Deviation (K)	FIRST rms T deviation (K)
310.34	0.2 K	0.13 K
270.55	0.3 K	0.13 K
247.42	0.7 K	0.32 K
225.18	1.5 K	0.61 K
209.41	1.5 K	0.71 K
189.33	4 K – 7 K	3.6 K
169.06	4 K – 9 K	3.8 K

Larger uncertainties at lower temperatures due to increasing error from extrapolation of calibration to temperatures progressively lower than the ambient blackbody temperature

This uncertainty would, in principle, not be present in FIRST balloon flights due to “space view” calibration port allowing more accurate extrapolation

Table Mountain Campaign
September 10 – October 24 2012

- Table Mountain, CA – 7500 ft above MSL; Easy access
- GPS-Met IPW every 30 minutes
- Raman H_2O Lidar on occasion
- Relatively low IPW: Less than 10 mm; several times < 5 mm
- Launch radiosondes concurrent with FIRST observations
  - Typically 3-4 sondes per 8 hour observing window
  - Three H_2O measurements: Lidar; Sonde; GPS
- Coordinate with A-Train/CALIPSO overpasses
  - Looking at aerosol composition
- Observe clear sky and cirrus skies
- Evaluate spectra, calibration, comparison with L-B-L and include cirrus/aerosol as we are able
- Several “golden” days/nights so far – Clear sky, Low H_2O, Lidar running, A-Train/CALIPSO overpass

On-Site at Table Mountain

FIRST Trailer at TMF

Preparing Radiosonde Launch

Evidence of Integrated Precipitable Water at TMF

Integrated Precipitable Water at Table Mountain (GPS-Met)

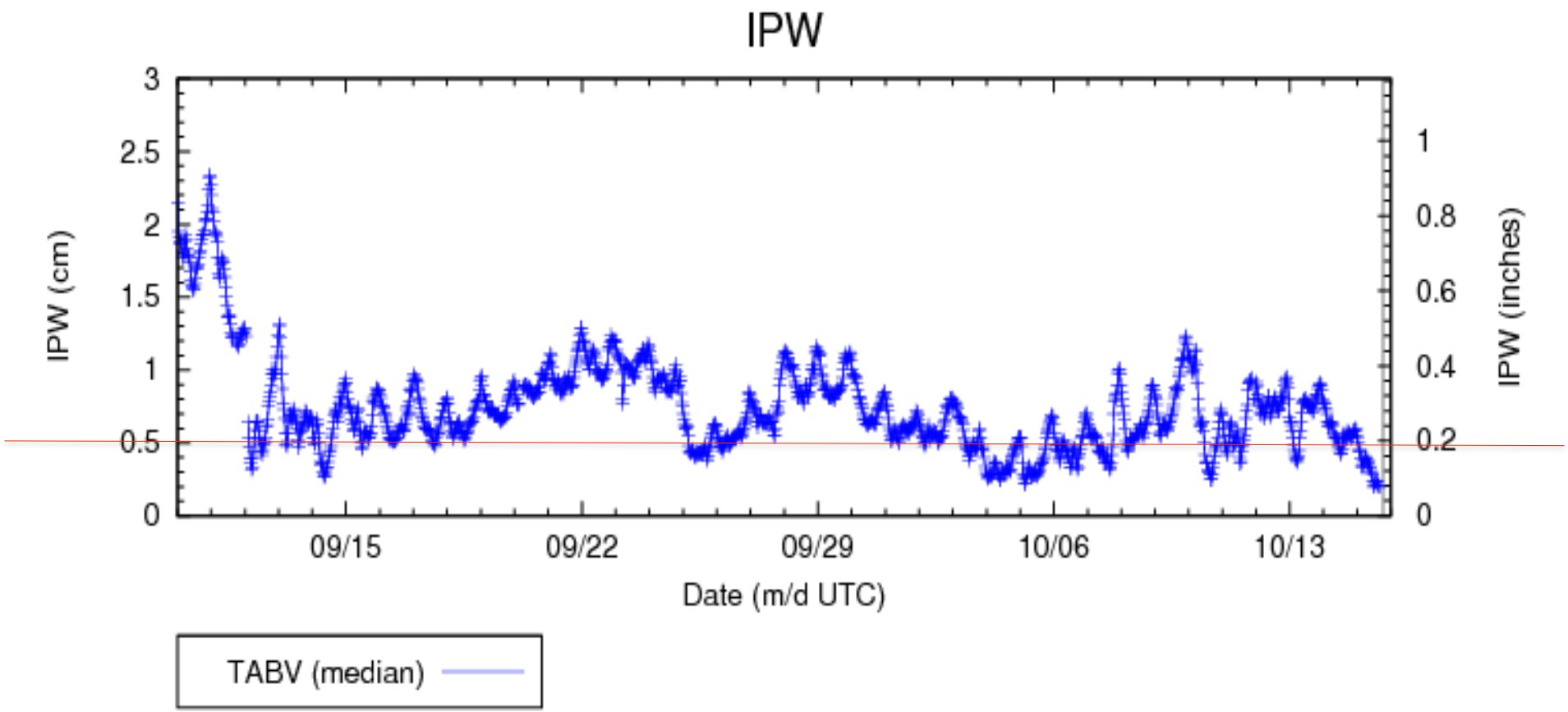

Preliminary Comparisons FIRST and L-B-L

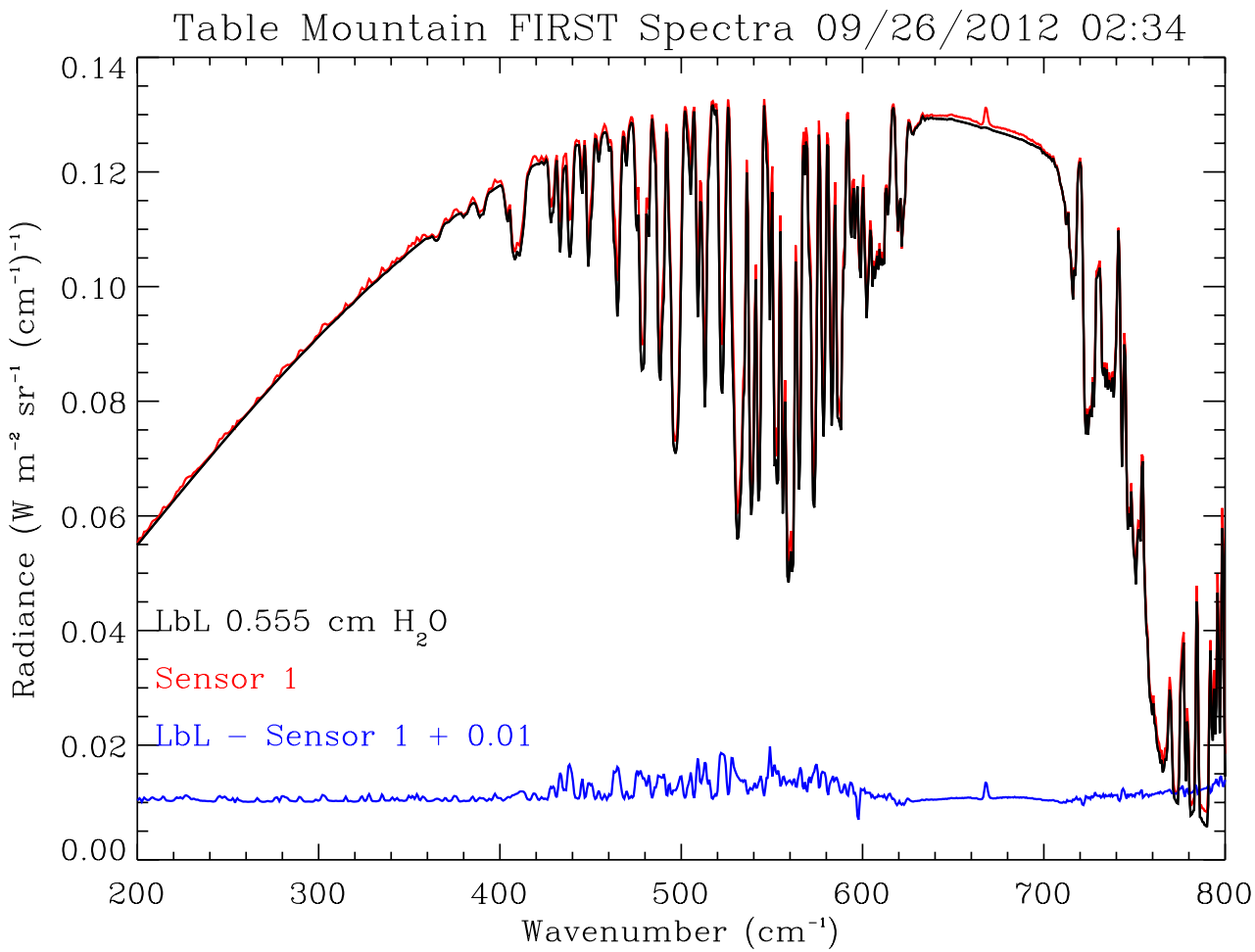

Preliminary Comparisons FIRST and L-B-L

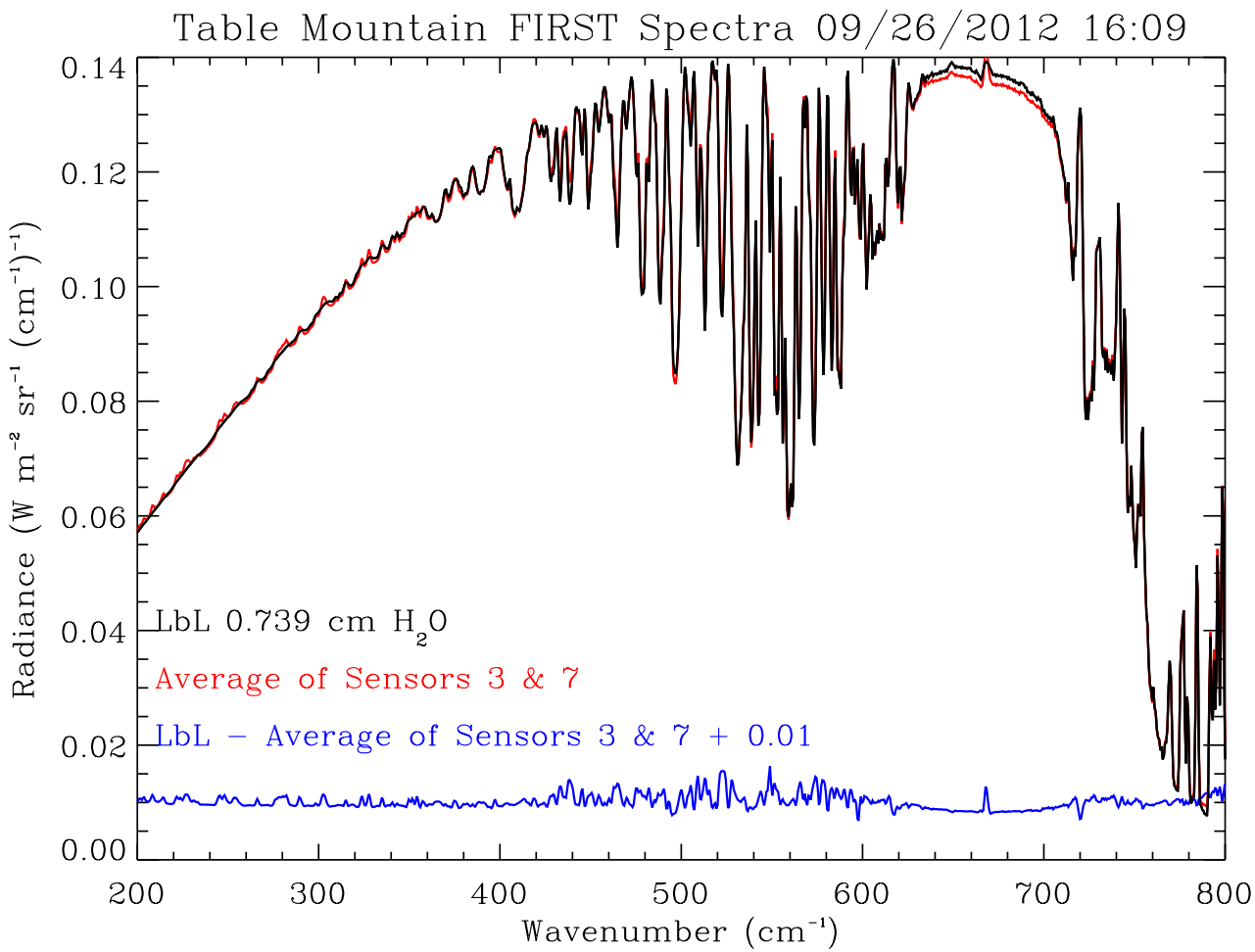

FIRST Summary

- FIRST recalibrated against a NIST TXR standard
- Absolute accuracy > 0.7 K (1-sigma) T_{scene} > 247 K
- Accuracy at lower temps limited in ground operations by blackbody temp
- Results submitted to Applied Optics [Latvakoski et al., 2012]

- FIRST now operating a 6 week campaign at Table Mountain, CA
- Excellent characterization of H2O profile with sonde, GPS, and lidar
- Overpasses of A-Train and CALIPSO to describe aerosol loading
- Substantial data 400 – 650 cm-1, major part of far-IR
- Initial comparisons against L-B-L look very good

- Data will be made available after completing quality checks, etc.